# Manege Vreehorst – Unisex Bodywarmer

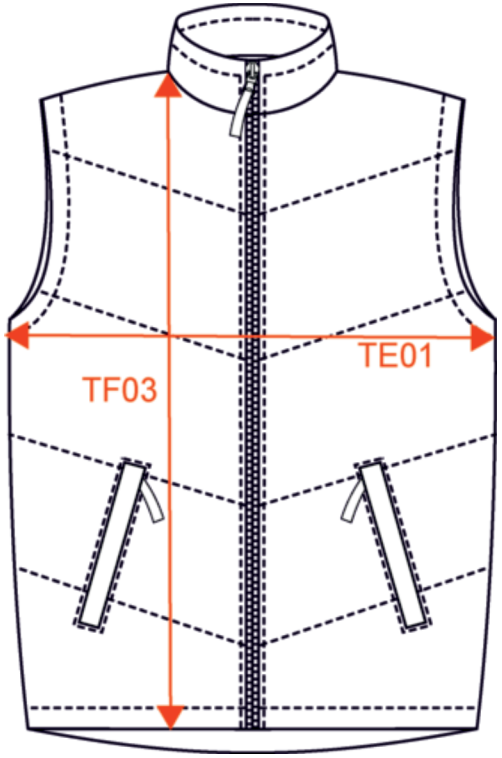


| | Sizes | XS | S | M | L | XL | 2XL | 3XL | 4XL | 5XL |
|---|---|---|---|---|---|---|---|---|---|---|
| A | Half Chest | 53.00 | 56.00 | 59.00 | 62.00 | 65.00 | 68.00 | 71.00 | 74.00 | x |
| B | Body Length | 68.50 | 70.50 | 72.50 | 74.50 | 76.50 | 78.50 | 80.50 | 82.50 | x |
| C | Sleeve Length | x | x | x | x | x | x | x | x | x |